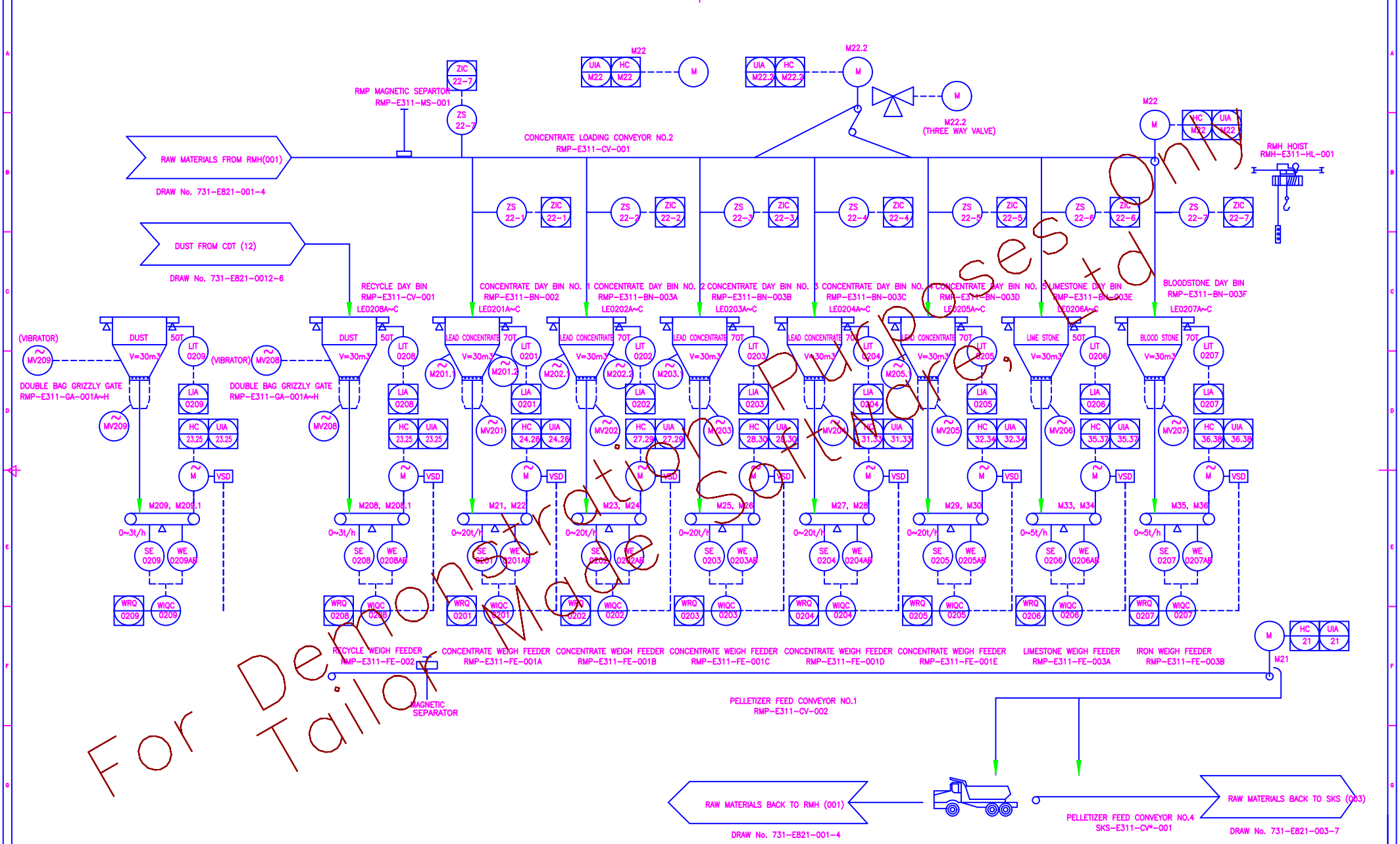

For Demonstration Purposes Only
Tailor Made Software, Ltd

OWNER: vedanta HINDUSTAN ZINC LIMITED, Dariba Smelter Complex Rajpura, Rajsamand, Rajasthan, India PIN-313211

VENDOR: NFC CHINA NONFERROUS METAL INDUSTRYS FOREIGN ENGINEERING AND CONSTRUCTION CO. LTD.

REVISIONS							
No.	DESCRIPTION	REV	CHK	DATE			
	INSTRUMENT UPDATION & MODIFICATION			1-07-2016	DESIGNED		
					CHECKED		
					APPROVED		

100,000 TPA LEAD SMELTER PROJECT, DARIBA

[731 - 2008] BASIC DESIGN

RAW MATERIAL PROPORTIONING | PIPING & INSTRUMENT DIAGRAM

ENFI CHINA ENFI ENGINEERING CORPORATION

PROJECT No.	PHASE	WGT(Kg)	DATE	SPECIALITY	SIZE	SCALE	DRAW. TD No.
			2009-05	INSTRUMENTATION	0.5		731-E821-002

731-E821-002-5 △1