For Demonstration Purposes Only
Tailor Made Software, Ltd

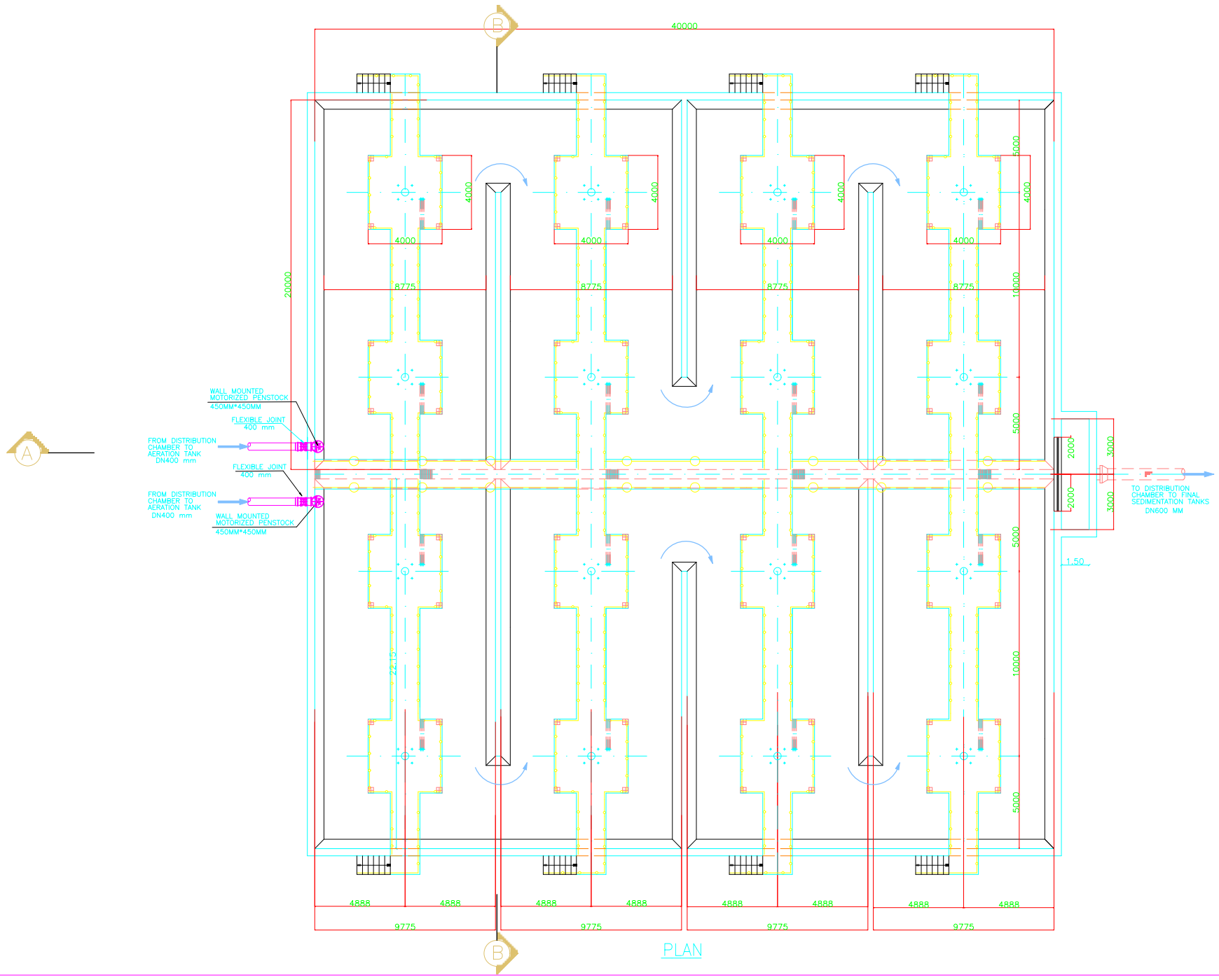

PLAN

REMARKS

1- THE PLANT AVERAGE DISCHARGE IS 10,000 M3/DAYFOR THE YEAR 2037 AND 15,000 M3/DAY FOR THE YEAR 2057 (ULTIMATE STAGE)

2- THE PLANT PROPOSED SYSTEM IS CONVENTIONAL ACTIVATED SLUDGE (CAS) .

3-ALL CONCRETE DIMENSIONS ARE ONLY INDICATIVE THE CONCRETE THICKNESS SHALL BE READ IN CONJUNCTION WITH THE STRUCTURAL DRAWINGS.

4- THE TANK CONCRETE AND WATER LEVELS IN HYDRAULIC PROFILE CALCULATIONS WERE BASED ON THE PLANT ULTIMATE PEAK FLOW OF 625 M3/HR.

5-A STAINLESS STEEL WEIR IS INSTALLED ON THE OUTLET CHANNEL AS PER TENDER SPECIFICATIONS

6- MAX. INTERCONNECTING PIPELINES WATER VELOCITY IS 1.00 M/S AND MIN. V= 0.50 M/S TO MAINTAIN THE FRICTION LOSSES AS MINIMUM AS POSSIBLE.AND TO REACH THE WATER LEVEL AT INLET CHAMBER = 9.70 M

7- PIPE DIAMETERS ARE SHOWN IN MILLIMETERS UNLESS OTHERWISE INDICATED

8-MINIMUM PIPE DIAMETER FOR SLUDGE WITHDRAWAL IS 200 MM AS PER THE EGYPTIAN CODE OF PRACTICE.

9- PUDDLE PEACE AND PIPE MATERIAL INSIDE THE TANKS ARE IN DI .

10-PIPES IN SITE SHALL BE LAID SUCH THAT THE MINIMUM SOIL COVER OVER PIPE CROWN IS 1.00 M AS PER THE EGYPTIAN CODE OF PRACTICE.

11- THE AVERAGE GROUND LEVEL IS 2.80. THIS LEVELS SHALL BE FINALIZED DURING THE DETAILED DESIGN STAGE UPON WORK COMMENCEMENT BASED ON THE FINISH ROAD DESIGN LEVELS IN THE WWTP SITE.

12- DISCHARGE OF THE WASTEWATER TREATMENT PLANT SHALL BE BY TREATED WATER PUMPS TO DRAIN WITH AVERAGE WATER LEVEL OF -0.18M

13- OUR DESIGN IS PRELIMINARY BASED ON THE SITE SURVEYS.AFTER COMMENCEMENT OF THE WORK THE SITE SURVEYS SHALL BE UPDATED ACCORDING TO THE GENERAL LAYOUT AND HYDRAULIC PROFILE OF THE PLANT STRUCTURE IN THE DETAILED DESIGN.

14-A TELESCOPIC VALVE IS INSTALLED FOR SLUDGE WITHDRAWAL WITH 300 MM DIAMETER.

15-INLET PIPE BELL MOUTH IS 0.5M LOWER THAN THE MAX WATER LEVEL IN TANK.